NOTES: UNLESS OTHERWISE SPECIFIED

1. CONSTRUCTION:
   HOUSING & PLUNGER: MOLDED NYLON TYPE 6,6.
   AVAILABLE IN TEN COLORS.
   CONTACT BLADE: NICKEL SILVER ALLOY CA 770.
   SPRING: STAINLESS STEEL TYPE 302.

2. PERFORMANCE:
   MAXIMUM CURRENT: 13.1 AMPS WITH A 76°
   TEMPERATURE RISE
   MAXIMUM VOLTAGE: 2.4 KV
   MAXIMUM TEMPERATURE: 200°F (93°C)

3. FEATURES:
   RIGHT ANGLE HOOK.
   FIELD SERVICEABLE.

REVISIONS			
LTR	DESCRIPTION	DATE	APPROVED

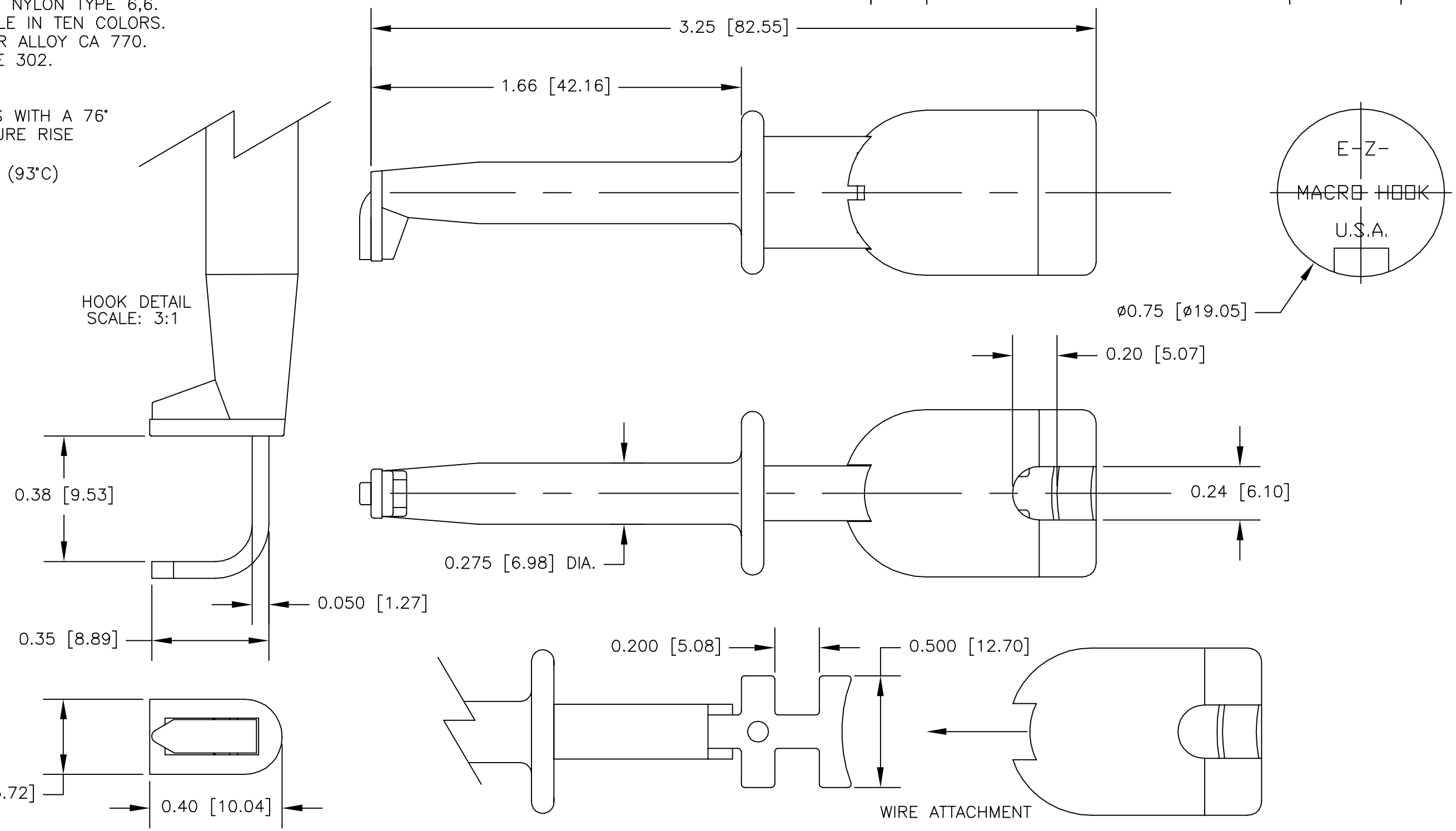

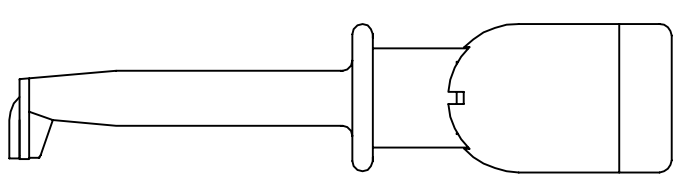

ACTUAL SIZE

		UNLESS OTHERWISE SPECIFIED DIMENSIONS ARE IN INCHES TOLERANCES ARE: FRACTIONS ± DECIMALS .XX ± .XXX ± ANGLES ±	CONTRACT NO.	
			APPROVALS	DATE
			DRAWN R.L.	6/09
		MATERIAL SEE NOTE.	APPROVED BY	
		FINISH SEE NOTE.		
NEXT ASSY	USED ON			
APPLICATION		DO NOT SCALE DRAWING		

E-Z-HOOK DIVISION OF TEKTEST INC. ARCADIA, CA 91006 U.S.A.

DESCRIPTION
E-Z-MACRO HOOK WITH RIGHT ANGLE BEND

SIZE	CODE IDENT NO.	DRAWING NO.	REV.
B	08505	XD	

SCALE 2:1 SHEET 1 OF 1

THE INFORMATION CONTAINED IN THIS DOCUMENT IS PROPRIETARY TO E-Z-HOOK. THE INFORMATION IS NOT TO BE REPRODUCED WITHOUT PRIOR WRITTEN PERMISSION OF E-Z-HOOK, DIV. OF TEKTEST INC.
MAXIMUM TESTED RATINS IN A HANDS-FREE CONTROLLED ENVIRONMENT. MAXIMUM RATINGS ARE NOT TO BE USED CONCURRENTLY.