NOTES: UNLESS OTHERWISE SPECIFIED

1. P/N: 9274COLOR
   INSULATOR: MOLDED PVC. AVAILABLE IN TEN COLORS.
   ALLIGATOR: STEEL. NICKEL PLATED.

2. P/N: 9260COLOR
   HOUSING: MOLDED NYLON. AVAILABLE IN TEN COLORS.
   FRAME: BRASS. NICKEL PLATED.
   CONTACT: BeCu OR PHOSPHOR BRONZE. NICKEL PLATED.

3. P/N: W-600/COLOR
   18AWG 65X36 TINNED COPPER
   0.144 [3.66] O.D. PVC INSULATION
   AVAILABLE IN TEN COLORS.

4. PERFORMANCE
   MAXIMUM CURRENT: 4.0 AMPS
   MAXIMUM VOLTAGE: 5000 W.V.D.C.
   MAXIMUM TEMPERATURE: 221°F (105°C)

LTR	DESCRIPTION	DATE	APPROVEI

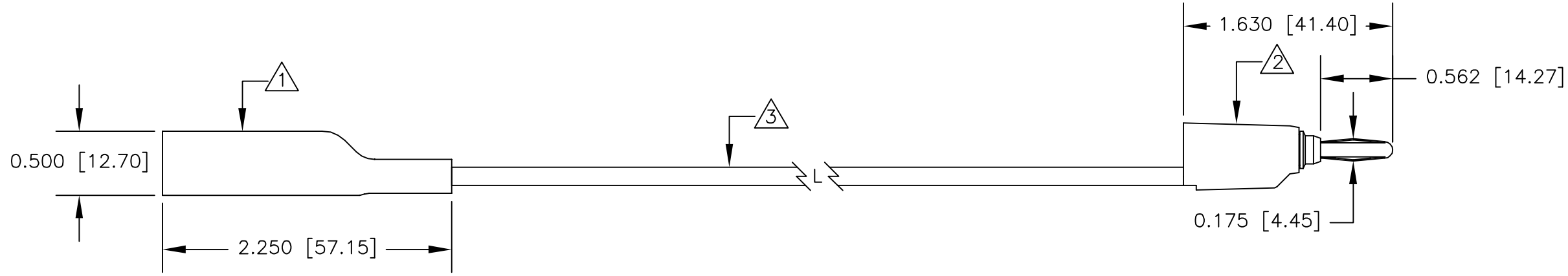

		UNLESS OTHERWISE SPECIFIED DIMENSIONS ARE IN INCHES TOLERANCES ARE: FRACTIONS ± DECIMALS .XX ± .XXX ± ANGLES ±	CONTRACT NO.	
			APPROVALS	DATE
			DRAWN R.L.	10/12
		MATERIAL SEE NOTE.	APPROVED BY	
		FINISH SEE NOTE.		
NEXT ASSY	USED ON			
APPLICATION		DO NOT SCALE DRAWING		

E-Z-HOOK DIVISION OF TEKTEST INC. ARCADIA, CA 91006 U.S.A.

DESCRIPTION
STD ALLIGATOR CLIP (9274) TO STK STD BAN PLUG (9260)

SIZE	CODE IDENT NO.	DRAWING NO.	REV
B	08505	681	

SCALE 1:1 SHEET 1 OF 1

THE INFORMATION CONTAINED IN THIS DOCUMENT IS PROPRIETARY TO E-Z-HOOK. THE INFORMATION IS NOT TO BE REPRODUCED WITHOUT PRIOR WRITTEN PERMISSION OF E-Z-HOOK, DIV. OF TEKTEST INC.
MAXIMUM TESTED RATINGS IN A HANDS-FREE CONTROLLED ENVIRONMENT. MAXIMUM RATINGS ARE NOT TO BE USED CONCURRENTLY.